DUNBAR 255 LED 7994

SKU 1384007

astro

PRODUCT SPECIFICATION

GENERAL

FINISH:	Painted White	**CABLE LENGTH:**	Not Applicable
MAIN MATERIAL:	Metal - Aluminium	**GROSS WEIGHT:**	1.46 (kg)
DIMENSIONS:	H: 255mm W: 104mm D: 125mm	**CLASS:**	CE (Class I)
INSTALLATION ORIENTATION:	Wall Mount - Horizontal (reduced IP rating) / Vertical	**IP RATING:**	IP65
		BATHROOM ZONE:	Zone 1, 2, 3
CUT OUT HOLE:	Not Applicable	**VOLTAGE:**	Mains 230V
RECESS DEPTH:	Not Applicable	**PRODUCT F MARK:**	Suitable for mounting on flammable materials
FIRE RATING:	Not Applicable		

LAMP

LIGHT SOURCE:	COB LED	**MACADAM ELLIPSE:**	3-Step
MAXIMUM WATTAGE:	2 x 3.2W	**UGR:**	To Be Advised
MAXIMUM LAMP LENGTH:	Not Applicable	**BEAM ANGLE:**	To Be Advised
LAMP INCLUDED?	Yes (Integral)	**TILT ADJUSTMENT ANGLE:**	Not Applicable
LUMINOUS FLUX:	364.76 (lm)	**ROTATION ADJUSTMENT ANGLE:**	Not Applicable
COLOUR TEMP:	3000 (K)	**AVERAGE LIFESPAN:**	36,300 (Hrs)
CRI:	80	**L70:**	To Be Advised
R9:	12.7		

ELECTRICAL

SWITCHED:	No	**SUPPLY FREQUENCY:**	50/60 (Hz)
DIMMABLE:	No	**DRIVER / BALLAST VOLTAGE:**	100-240 (V)
DIMMING METHOD:	Not Applicable	**DRIVER AVERAGE LIFESPAN:**	Not Applicable
DRIVER OUTPUT CURRENT:	350 (mA)	**EFFICACY:**	46.41 (lm/W)
DRIVER OUTPUT VOLTAGE:	Not Applicable	**DRIVER / BALLAST INCLUDED?**	Yes (Integral)

ADDITIONAL INFORMATION

CE

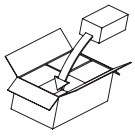

BOX QUANTITY X6
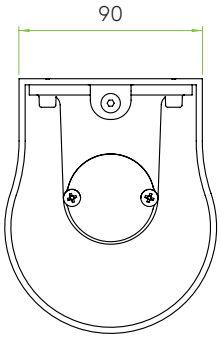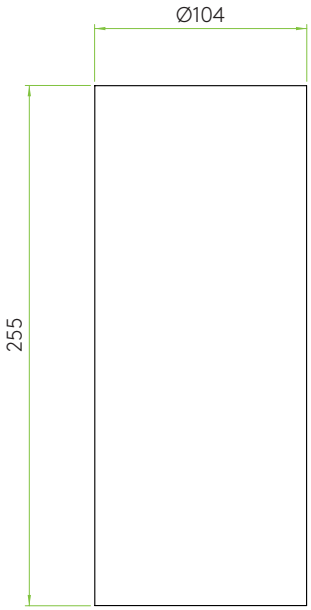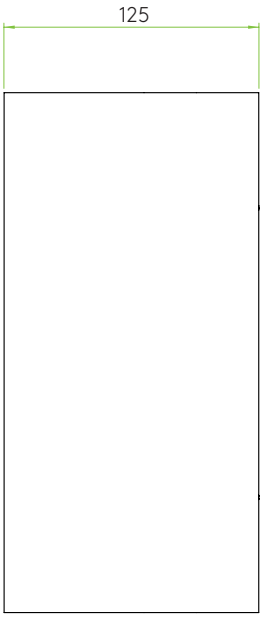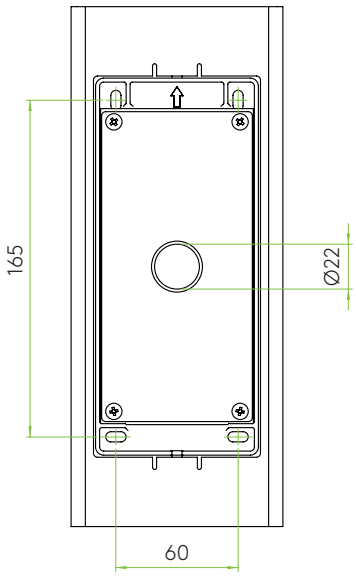
PRODUCT ELEVATIONS