ATELIER ARM ASSEMBLY 4560 / SKU 1224002
+ ATELIER FLOOR BASE 4563 / SKU 1224005

astro

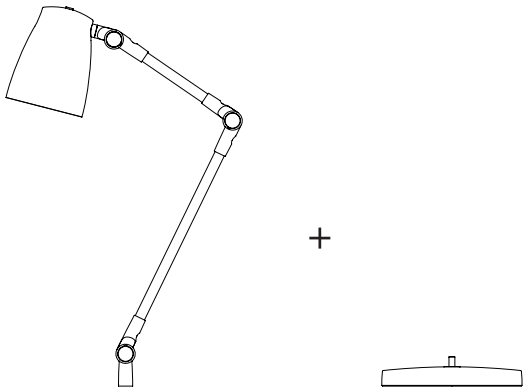

4560 4563

PRODUCT SPECIFICATION

GENERAL

FINISH:	White	CABLE LENGTH:	3000
MAIN MATERIAL:	Metal - Aluminium	GROSS WEIGHT:	To Be Advised
DIMENSIONS (ARM ASSEMBLY):	H:800mm W:122mm D:160mm	CLASS:	CE (Class II)
DIMENSIONS (FLOOR BASE):	H:27mm Ø:190mm	IP RATING:	IP20
INSTALLATION ORIENTATION:	Not Applicable	BATHROOM ZONE:	Zone 3
CUT OUT HOLE:	Not Applicable	VOLTAGE:	Mains 230 (V)
RECESS DEPTH:	Not Applicable	PRODUCT F MARK:	Not Applicable
FIRE RATING:	Not Applicable		

LAMP

LIGHT SOURCE:	E27/ES	MACADAM ELIPSE:	Not Applicable
MAXIMUM WATTAGE:	1 x 28W Max	UGR:	Not Applicable
MAXIMUM LAMP LENGTH:	115mm / 4.52"	BEAM ANGLE:	Not Applicable
LAMP INCLUDED?	No	TILT ADJUSTMENT ANGLE:	180 (Degrees)
LUMINOUS FLUX:	Lamp Dependent	ROTATION ADJUSTMENT ANGLE:	330 (Degrees)
COLOUR TEMP:	Lamp Dependent	AVERAGE LIFESPAN:	Lamp Dependent
CRI:	Lamp Dependent	L70:	Not Applicable
R9:	Lamp Dependent		

ELECTRICAL

SWITCHED:	Yes	SUPPLY FREQUENCY:	Not Applicable
DIMMABLE:	No	DRIVER / BALLAST VOLTAGE:	Not Applicable
DIMMING METHOD:	Lamp Dependent	DRIVER AVERAGE LIFESPAN:	Not Applicable
DRIVER OUTPUT CURRENT:	Not Applicable	EFFICACY:	Lamp Dependent
DRIVER OUTPUT VOLTAGE:	Not Applicable	DRIVER INCLUDED?	Not Applicable

ADDITIONAL INFORMATION

CE

ATELIER ARM ASSEMBLY (4560)

For use with: Atelier Floor (4566), Atelier Desk (4563)
And Atelier Clamp (4568)

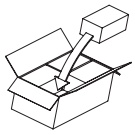

BOX QUANTITY
TO BE ADVISED

PRODUCT ELEVATIONS

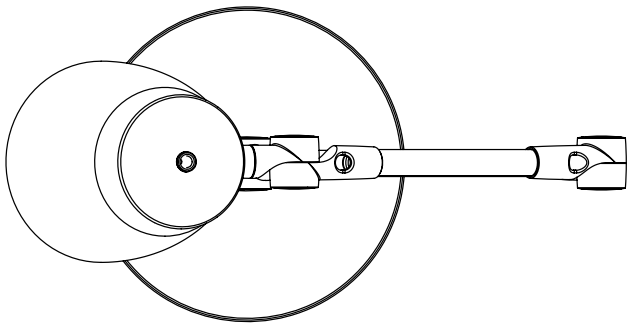

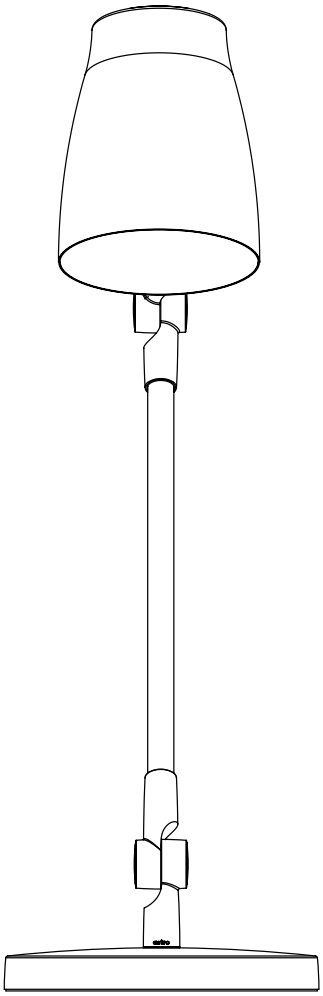

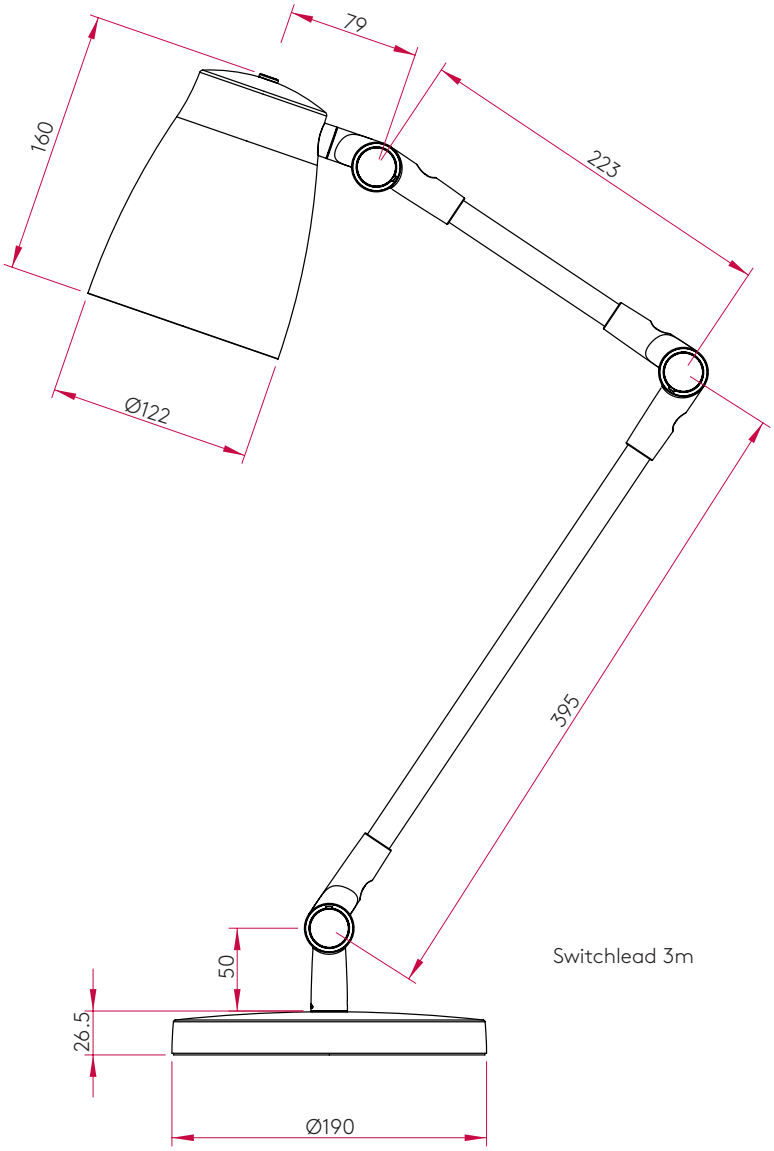

Switchlead 3m